CARBOLITE GERO 30-3000°C

Installation, Operation and Maintenance Instructions

300°C General Purpose Oven - GP A/B Models: 220 Litres
No Controller

GP 220 + No Controller

MEN-GP220AB-005_NOCTRL (07-03-2023)

part of VERDER scientific

Contents

This manual is for guidance on the use of the Carbolite Gero product specified on the front cover. This manual should be read thoroughly before unpacking and using the furnace or oven. The model details and serial number are shown on the back of this manual. Use the product for the purpose for which it is intended.

1.0 Symbols and Warnings 4
1.1 Switches and Lights 4
1.2 General Warnings 4
2.0 Installation 6
2.1 Unpacking and Handling 6
2.2 Siting and Setting Up 6
2.3 Flat Pack Stand (optional) 8
2.3.1 Parts Supplied 8
2.3.2 Flat Pack Stand Assembly 9
2.4 Electrical Connections 10
3.0 Temperature Controller 12
4.0 Operation 13
4.1 Operating Cycle 13
4.2 Over-Temperature Control (if fitted) 13
4.3 Vents 14
4.4 Temperature Uniformity 14
4.5 Explosive Vapours 14
4.6 Atmospheres 15
4.7 Interior Light (if fitted) 15
4.8 Solenoid Valve with Manual Switch (if fitted) 15
4.9 Variable Speed Fan (if fitted) 15
4.10 Exhaust Fan (if fitted) 15
4.11 Stoving and Curing (if fitted) 16
4.11.1 Pre-heater (if fitted) 16
4.12 Door Switch (if fitted) 16
5.0 Maintenance 17
5.1 General Maintenance 17
5.2 Maintenance Schedule 17
5.2.1 Cleaning 19
5.3 Calibration 19
5.4 After-Sales Service 19
5.5 Recommended Spare Parts and Spare Parts Kit 19
5.6 Power Adjustment 19

6.0 Repairs and Replacements 21
6.1 Safety Warning - Disconnection from Power Supply 21
6.2 Safety Warning - Refractory Fibre Insulation 21
6.3 Panel Removal 21
6.4 Temperature Controller Replacement 22
6.5 Fuse Replacement 22
6.6 Element Replacement 22
6.7 Thermocouple Replacement 22
6.8 Solid-state Relay Replacement 23
7.0 Fault Analysis 24
A. Oven Does Not Heat Up 24
B. Oven Overheats 24
8.0 Wiring Diagrams 25
8.1 WV-11-01 25
8.2 WS-10-01 - Isolating for 208 V version only 26
9.0 Fuses and Power Settings 27
9.1 Fuses 27
9.2 Power Settings 27
10.0 Specifications 28
10.1 Environment 28

1.0 Symbols and Warnings

1.1 Switches and Lights

Instrument switch: when the instrument switch is operated the temperature control circuit is energised.

Interior light: when the interior light switch is operated the interior light illuminates.

Solenoid valve (if fitted): see section 4.8 for full details

Variable speed fan (if fitted): see section 4.9 for full details

Exhaust fan (if fitted): see section 4.10 for full details

Stoving and curing (if fitted): see section 4.11 for full details

1.2 General Warnings

DANGER – Electric shock. Read any warning printed next to this symbol.

WARNING: Risk of fatal injury.

DANGER – Hot surface. Read any warning printed next to this symbol.

WARNING: All surfaces of a product may be hot.

DANGER – Read any warning printed next to this symbol.

Caution – Double Pole/Neutral Fusing

2.0 Installation

2.1 Unpacking and Handling

When unpacking or moving the product, always lift by its base; do not use the door or any other projecting cover or component to support the equipment when moving it. Use a fork lift or pallet truck to move the product; position the product on a level surface and use an adequate number of personnel to safely move the product into position.

Carefully remove any packing material from inside and around the product before use. Avoid damaging the surrounding insulation when removing packing materials.

Locate the shelves as required.

Some models may be lifted by fitting lifting bolts to captive threads which are fitted in the top of the case, whilst others may have welded on lifting eyes.

Note: This product contains Refractory Ceramic Fibre (also known as Alumino Silicate Wool - ASW). For precautions and advice on handling this material see section 6.2.

2.2 Siting and Setting Up

Place the product on a level surface in a well ventilated area.

Site away from other sources of heat and on a non-flammable surface that is resistant to accidental spillage or hot materials.

The surface on which the equipment is mounted should be stable and not subject to movement or vibrations.

The height of the mounting surface is important to avoid operator strain when loading and unloading samples.

Unless otherwise stated elsewhere in this manual, ensure that there is **at least 150 mm** of free space around the back and sides of the product. Clear space is required above the product to dissipate heat.

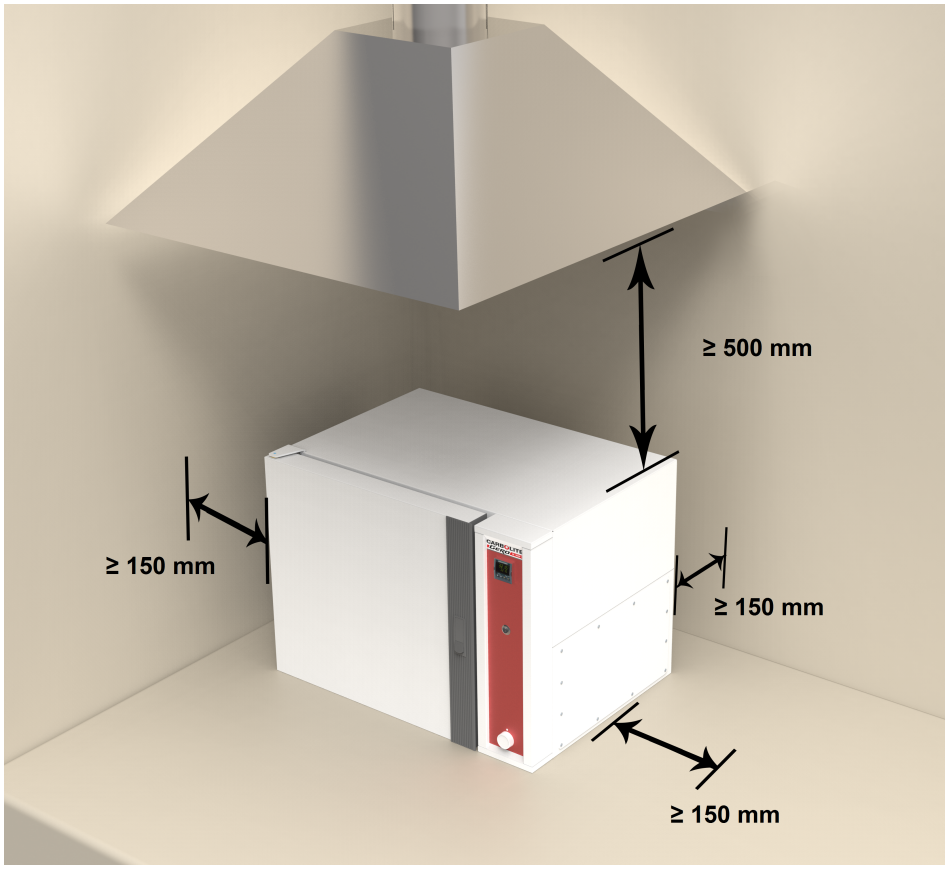

Depending on the application of the product, it may be appropriate to position it under an extraction hood. Ensure the extraction hood is switched on during use.

Ensure that the product is placed in such a way that it can be quickly switched off or disconnected from the electrical supply.

Under no circumstances should any objects be placed on top of the product. Always ensure that any vents on the top of the product are clear of any obstruction. Always ensure all cooling vents and cooling fans (if fitted) are clear of any obstruction.

2.3 Flat Pack Stand (optional)

The flat pack stand is available in a range of sizes depending on the dimensions of the product for which it has been ordered. Subsequently, the number of fixings may vary between the different sizes of stand.

2.3.1 Parts Supplied

Stand Top (x1)	Stand Leg (x2)
Stand Cross Brace (x2)	**M10 Bolt**
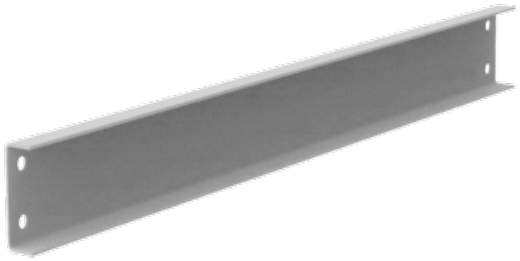	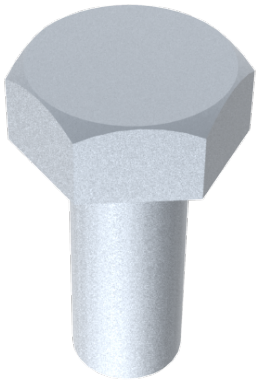
M10 Washer	**M10 Locking Nut**
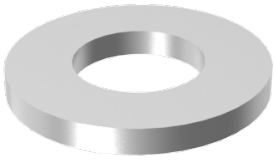	

2.3.2 Flat Pack Stand Assembly

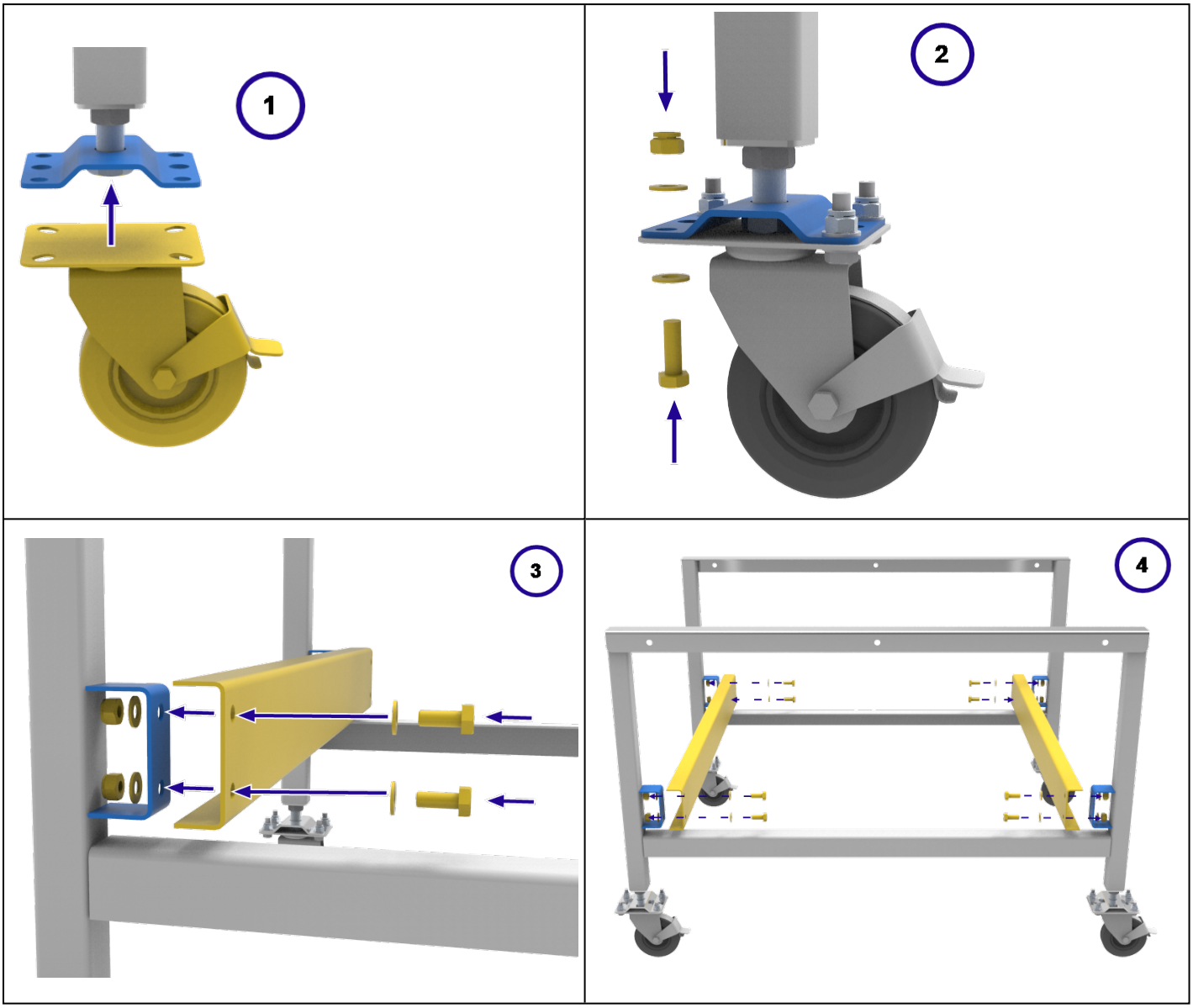

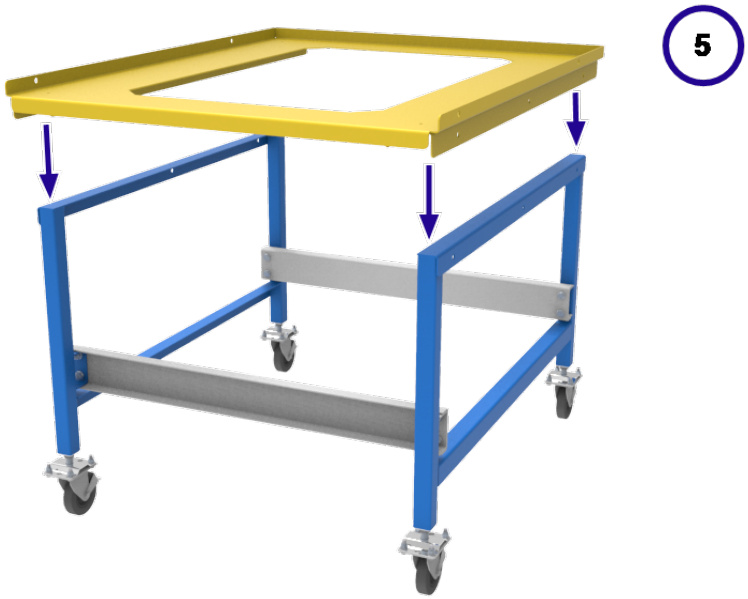

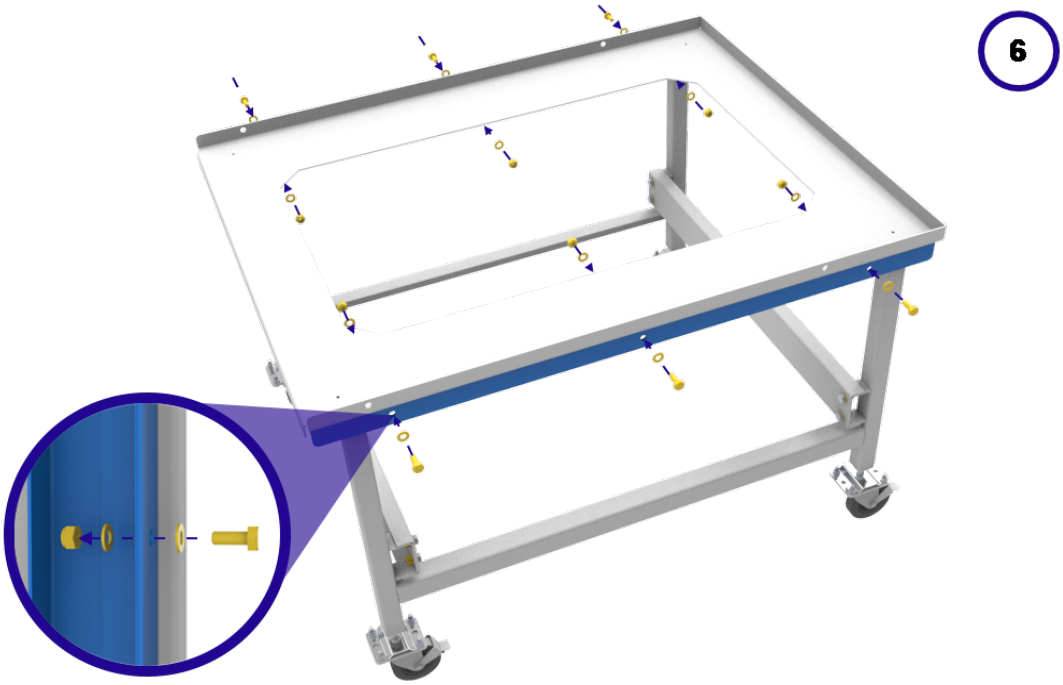

2.4 Electrical Connections

Connection by a qualified electrician is recommended.

Some models may be ordered for 3-phase use, which may be star or delta.

Check the product rating label before connection. The supply voltage should agree with the voltage on the label and the electrical supply capacity should be sufficient for the current on the label.

A table of the most common fuse ratings is also given in section 9.0 towards the back of this manual. Ensure that the correct fuse is used for the product supplied. When the mains cable is factory fitted internal fuses are also fitted. Customer fusing is essential.

Product with supply cable: either wire directly to an isolator or fit with a line plug.

Product without supply cable: a permanent connection to a fused and isolated supply should be made to the internal terminals after temporary removal of the product access panel. The access panel is located at the top of the 'A' models and the right hand side of the 'B' models.

Connection by line plug: the plug should be within reach of the operator and should be easy to remove.

Connection to isolating switch: this should operate on both conductors (single phase) or on all live conductors (three phase), and should be within reach of the operator.

The electrical supply MUST incorporate an earth (ground).

Electrical Connection Details:

Supply	**Terminal Label**	**Cable Colour**	**Supply Types**	
			Live - Neutral	Reversible or Live-Live
1-phase	L1	Brown	to live	to either power conductor (For USA 200-240V, connect L1)
	N / L2	Blue	to neutral	to the other power conductor (For USA 200-240V, connect L2)
	PE	Green/ Yellow	to earth (ground)	to earth (ground)

3-phase	L1	Black	to phase 1
	L2	Black	to phase 2
	L3	Black	to phase 3
	N	Light Blue	to neutral (**except delta**)
	PE	Green/ Yellow	to earth (**ground**)

DO NOT connect a product ordered for three phase use to a single phase supply or to the wrong type of three phase supply.

3.0 Temperature Controller

If this product is fitted with a temperature controller, instructions are provided separately.

4.0 Operation

4.1 Operating Cycle

The product is fitted with an instrument switch. The switch cuts off power to the controllers and elements. The circulation fan will operate when the instrument switch is on. An optional door switch may be fitted. If so, ensure that the door is closed to operate the fans and heating elements.

Turn on the instrument switch to activate the temperature controllers. The controllers illuminate and go through a short test cycle.

Over-Temperature option only. If the digital over-temperature option has not yet been set as required, set and activate it according to the over-temperature controller instructions.

The product will heat up according to the controller setpoint or program, unless a time switch is fitted and switched off.

Over-Temperature option only. If the over-temperature circuit has tripped, an indicator on the over-temperature controller flashes and the heating elements are isolated. Find and correct the cause before resetting the over-temperature controller according to the instructions supplied.

To switch the product off, turn off the instrument switch. If the product is to be left unattended, isolate the electricity supply.

DO NOT switch off if the temperature is above 100 °C - damage could be caused to the fan and motor. Adjust the controller to allow the temperature to fall.

4.2 Over-Temperature Control (if fitted)

The over-temperature controller should typically be set at 15 °C above the main controller. If an over-temperature condition occurs, check the main controller is functioning correctly.

An over-temperature condition cuts off power to the heating elements. A light in the over-temperature controller flashes. To reset this, refer to the over-temperature control section of this manual.

4.3 Vents

This product has two vents, each covered by a sliding baffle plate. The inlet vent is permanently open, while the outlet may be opened or closed by means of the sliding plate.

Note: The sliding plate gets hot. Do not touch it when the product is hot! Only make adjustments when the product is cold.

On vertical (A) models, the vents are located on the side of the unit.

On horizontal (B) models, the two vents are located on the top of the unit.

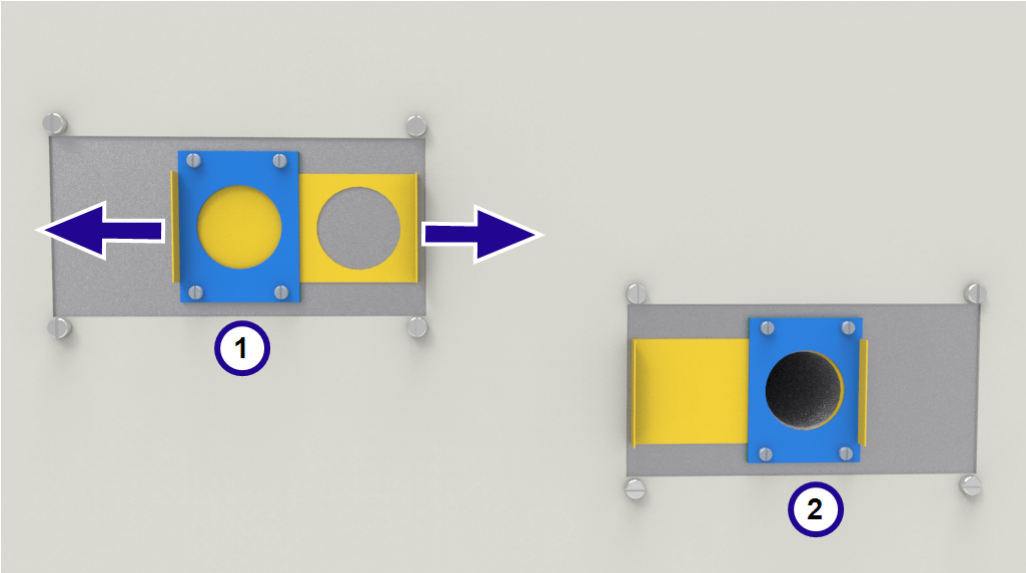

1	Outlet
2	Inlet

4.4 Temperature Uniformity

Where accurate temperature control of the load is important, use the central part of the chamber and place or distribute the load to allow free air circulation. Do not place loads on the chamber floor: use the bottom shelf.

4.5 Explosive Vapours

Unless your product includes the stoving and curing option, this model is not suitable for drying or heat treatment applications where vapours are released that are combustible or which can form explosive mixtures with air. Carbolite Gero manufactures other products suitable for these applications.

4.6 Atmospheres

When an optional gas inlet is fitted, there is a label near the inlet saying "INERT GAS ONLY". In practice, inert or oxidising gases may be used, but not combustible or toxic gases.

The chamber is not gas tight, the gas usage may be high and the chamber is always likely to contain some air. Residual oxygen of approximately 1% to 2% is to be expected.

4.7 Interior Light (if fitted)

If fitted, the interior light is operated using the panel mounted switch. It will only operate when the instrument switch is on.

4.8 Solenoid Valve with Manual Switch (if fitted)

If ordered the solenoid valve is operated using the panel mounted switch. When the switch is in the 'ON' position the solenoid valve will allow gas to

flow. Ensure the installation and use of the product does not create a hazardous atmosphere. The workspace must have sufficient ventilation.

4.9 Variable Speed Fan (if fitted)

If fitted, the variable speed control is fitted in the air circulation fan circuit. A panel mounted rotary dial is used to control the speed.

Please note that there is a minimum setting at which the fan motor starts up when the product is switched on. It is recommended that the speed of the fan is not set below 50%, as there would be very little air flow around the chamber and also risk overheating the fan motor.

4.10 Exhaust Fan (if fitted)

To operate the exhaust fan use the fan switch on the control panel; this is only functional when the instrument switch is on.

The level of air exhaust can be controlled by adjusting the slider under the exhaust box.

When the exhaust fan is turned on, there may be a drop in internal temperature before the product recovers to the setpoint value.

The airflow should be adjusted to the minimum required by the process to reduce the amount of energy wasted in heating air.

4.11 Stoving and Curing (if fitted)

The stoving and curing option adds an explosion relief panel and a powered exhaust fan. With this option the exhaust fan operates continuously when the product is switched on.

A pressure switch detects that there is sufficient air flow through the chamber. If the pressure switch does not detect sufficient air flow, a fault light illuminates and heating is disabled.

At least 610 mm free space must be left around the explosion relief panel to allow this to break out if there is a rapid build up of pressure inside the chamber.

Please note that if the stoving and curing option is fitted, there may be an increase in the power rating of the product. See the product rating label located on the side panel of the product for correct power rating.

4.11.1 Pre-heater (if fitted)

Products with the stoving and curing option may also be fitted with a pre-heater that pre-heats the incoming air to the same temperature set on the main controller.

The temperature of the pre-heater is controlled by the main controller, but measured by a separate thermocouple.

4.12 Door Switch (if fitted)

If ordered, the door switch will isolate the heating elements and circulation fan. The door switch is operated when the door is opened causing the heating elements and air circulation fan to be switched off.

5.0 Maintenance

5.1 General Maintenance

Preventive rather than reactive maintenance is recommended. The type and frequency depends on the product use; the following are recommended.

5.2 Maintenance Schedule

CUSTOMER
QUALIFIED PERSONNEL

DANGER! ELECTRIC SHOCK. Risk of fatal injury. Only electrically qualified personnel should attempt these maintenance procedures.

Maintenance Procedure	Method	Frequency				
		Daily	Weekly	Monthly	Bi-Annually	Annually
Safety						
Over-Temperature Safety Circuit (if fitted)	Set an over-temperature setpoint lower than the displayed temperature and check for an over-temperature alarm as detailed in this manual					
Over-Temperature Safety Circuit (if fitted)	Electrical measurement					
Door Seal	Visual inspection - check for splits or fraying					
Door Seal	Replacement					
Air Vent	Check and clean if necessary					
Electrical Safety (external)	Visual check of external cables and plugs					
Electrical Safety (internal)	Physically check all connections and cleaning of the power plate area					
Function						
Temperature Calibration	Tested using certified equipment, frequency dependent on the standard required					
Operational Check	Check that all functions are working normally					
Operational Check	Thorough inspection and report incorporating a test of all functions					

Performance						
Cooling Fans (if fitted)	Check whether the cooling fans are working	■				
Circulating Fan (if fitted)	Visual check to see if it is running		■			
Circulating Fan (if fitted)	Check bearings and replace if necessary					■
Element Circuit	Electrical measurement					■
Power Consumption	Measure the current drawn on each phase / circuit					■
Shelves	Visual check for fit and damage	■				

5.2.1 Cleaning

The product's outer surface may be cleaned with a damp cloth. Do not allow water to enter the interior of the case or chamber. Do not clean with organic solvents.

Under no circumstances should any objects be placed on top of the product. Always ensure that any vents on the top of the product are clear of any obstruction. Always ensure all cooling vents and cooling fans (if fitted) are clear of any obstruction.

5.3 Calibration

After prolonged use, the controller and/or thermocouple may require recalibration. This is important for processes that require accurate temperature readings or for those that use the product close to its maximum temperature. A quick check using an independent thermocouple and temperature indicator should be made from time to time to determine whether full calibration is required. Carbolite Gero can supply these items.

Depending on the controller fitted, the controller instructions may contain calibration instructions.

5.4 After-Sales Service

Carbolite Gero Service has a team of Service Engineers who can offer repair, calibration and preventive maintenance of furnace and oven products both at the Carbolite Gero factory and at customers' premises throughout the world. A telephone call or email often enables a fault to be diagnosed and the necessary parts to be despatched.

In all correspondence please quote the serial number and model type given on the rating label of the product. The serial number and model type are also given on the back of this manual when supplied with the product.

Carbolite Gero Service and Carbolite Gero contact information can be found on the back page of this manual.

5.5 Recommended Spare Parts and Spare Parts Kit

Carbolite Gero can supply individual spare parts or a kit of the items most likely to be required. Ordering a kit in advance can save time in the event of a breakdown.

Each kit consists of a fan and motor assembly, a thermocouple, a solid state relay, an element (or set of elements) and a door seal. Individual spare parts are also available.

When ordering spare parts please quote the model details as requested above.

5.6 Power Adjustment

The control system incorporates electronic power limiting, but for the model listed in this manual the power limit is set to 100%. The power limit parameter OP.Hi may be accessible to the operator, but should not generally be altered.

In some cases the supply voltage may be outside the range 220-240 V or the 3-phase equivalent, the power limit parameter may be set to a value other than 100%. Do not increase the value to 100%, see section 9.0 for details of power limit settings.

6.0 Repairs and Replacements

6.1 Safety Warning - Disconnection from Power Supply

Immediately switch the product off in the event of unforeseen circumstances (e.g. large amount of smoke). Allow the product to return to room temperature before inspection.

Always ensure that the product is disconnected from the electrical supply before repair work is carried out.

Caution: Double pole/neutral fusing may be used in this product.

6.2 Safety Warning - Refractory Fibre Insulation

Insulation made from High Temperature Insulation Wool

Refractory Ceramic Fibre, better known as (Alumina silicate wool - ASW).

This product contains **alumino silicate wool** products in its thermal insulation. These materials may be in the form of blanket or felt, formed board or shapes, slab or loose fill wool.

Typical use does not result in any significant level of airborne dust from these materials, but much higher levels may be encountered during maintenance or repair.

Whilst there is no evidence of any long term health hazards, it is strongly recommended that safety precautions are taken whenever the materials are handled.

Exposure to fibre dust may cause respiratory disease.

When handling the material, always use approved respiratory protection equipment (RPE-eg. FFP3), eye protection, gloves and long sleeved clothing.

Avoid breaking up waste material. Dispose of waste in sealed containers.

After handling, rinse exposed skin with water before washing gently with soap (not detergent). Wash work clothing separately.

Before commencing any major repairs it is recommended to make reference to the European Association representing the High Temperature Insulation Wool industry (www.ecfia.eu).

Further information can be provided on request. Alternatively, Carbolite Gero Service can quote for any repairs to be carried out either on site or at the Carbolite Gero factory.

6.3 Panel Removal

Disconnect the product from the electrical supply.

Remove the screws holding the top panel on 'A' models and right panel on 'B' models. Do not disconnect any wiring without first making a careful note of all the connections.

For the internal element cover. Open the door. Remove any screws holding the panel and any clips holding thermocouples in position. Remove the cover.

6.4 Temperature Controller Replacement

Refer to the controller instructions for more information on how to replace the temperature controller.

6.5 Fuse Replacement

Fuses are accessed by removal of the appropriate panel, as described in the 'Panel Removal' section. Depending on the model, supply fuses and control circuit fuses may be mounted in their own holders, or may be on a circuit board that contains an EMC filter. The fuses are marked with their ratings.

Take care not to disconnect the wires leading from the EMC filter without first recording their positions: they must be reconnected to the correct terminals.

6.6 Element Replacement

Remove the access panel which is located at the top of 'A' models and the right hand side of 'B' models. Remove the air guide.

- Disconnect the wires from the heating element terminals.
- Remove any starlock washers - these may need to be cut with wire cutters.
- Remove any clips holding the element inside the chamber and withdraw the element.
- Reverse the procedure when fitting the new heating element.
- To find out whether the heating element failure was caused by a fault in the control circuit, operate the product at a low temperature and check that it is functioning correctly.

Compression fittings are only fitted to moisture extraction and stoving and curing products. If fitted, ferrules need replacing.

Old elements may be to be cut to remove from the oven.

6.7 Thermocouple Replacement

Disconnect the product from the power supply. Remove the appropriate panel to gain access to the thermocouple connections. Make a note of the thermocouple connections.

Thermocouple cable colour codings are:

Thermocouple leg	Colour
positive (type K)	green
negative	white

Undo any clips holding the thermocouple. Remove the air guide from the oven chamber. Disconnect the thermocouple from its terminal block. Unscrew the compression fitting inside the chamber and pull the thermocouple into the chamber. Cut through the thermocouple behind the olive and remove the two parts. Loosely assemble compression fitting with a new ferrule. Feed in new thermocouple through from the back. Tighten the compression fitting. Refit the air guide. Bend the thermocouple to match the shape of the previous part and refit any clips.

Refit the element access panel.

Compression fittings are only fitted to moisture extraction and stoving and curing products. If fitted, ferrules need replacing.

6.8 Solid-state Relay Replacement

Disconnect the product from the electrical supply and remove the product's access panel. The access panel is located at the top of 'A' models and the right hand side of 'B' models.

Make a note of the wiring connections to the solid state relay and disconnect them.

Remove the solid state relay from the base panel or aluminium plate.

Replace and reconnect the solid state relay ensuring that the bottom of the solid state relay connects securely to the base panel or aluminium plate, as good thermal contact is required.

Replace the removed panel.

7.0 Fault Analysis

A.	Oven Does Not Heat Up				
1.	The temperature controller is OFF	▶	No power from supply	▶	Check the fuses in the supply line
2.	The temperature controller is ON	▶	The controller shows a very high temperature or a code such as EEE or --- or S.br	▶	The temperature sensor has broken or has a wiring fault
		▶	The controller shows a low temperature	▶	The SSR could be failing to switch on due to internal failure, faulty logic wiring from the controller, or faulty controller
		▶	There are no lights glowing on the controller	▶	The controller may be faulty or not receiving a supply due to a faulty switch or a wiring fault

B.	Oven Overheats				
1.	Oven only heats up when the instrument switch is ON	▶	The controller shows a very high temperature	▶	The controller is faulty
		▶	The controller shows a low temperature	▶	The thermocouple may have been shorted out or may have been moved out of the oven
				▶	The thermocouple may be connected the wrong way round
				▶	The controller may be faulty
2.	Oven heats up when the instrument switch is OFF	▶	The SSR has failed "ON"	▶	Replace the SSR. Check for an accidental wiring fault which could have overloaded the SSR

8.0 Wiring Diagrams

8.1 WV-11-01

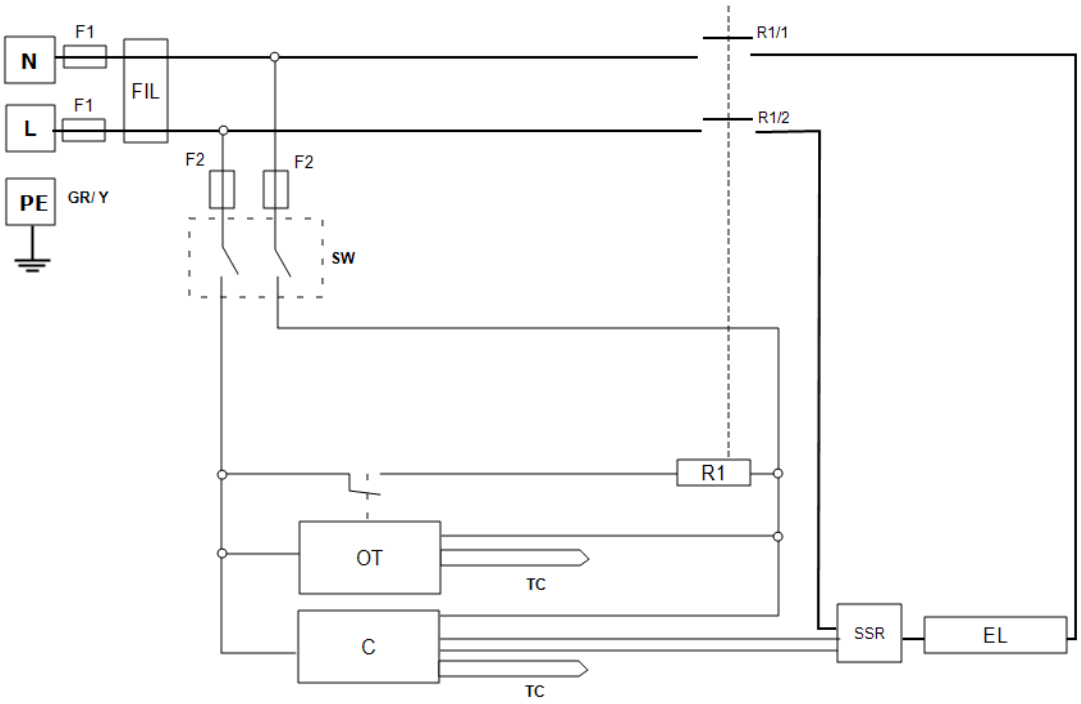

Key	
F1, F2	Fuses
FIL	Filter
SW	Instrument Switch
R1	Relay (Coil)
R1/1, R1/2	Relay Contactor
C	Temperature Controller
OT	Over-Temperature Controller
TC	Thermocouple
SSR	Solid State Relay
EL	Element(s)
*	If Fitted
L	Live
N	Neutral
PE (GR/Y)	Earth (Green+Yellow)

8.2 WS-10-01 - Isolating for 208 V version only

The transformer changes the supply voltage of the control circuit into the desired operating range for the controller and other components.

The supply voltage as shown is taken from a single phase supply or from the phase-to-phase voltage of a 3-phase supply.

The instrument circuit is modified as follows.

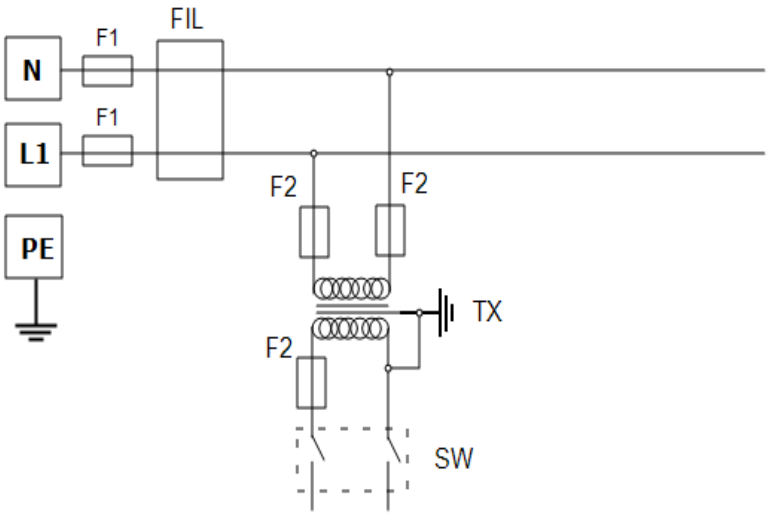

Key	
F1, F2	Fuses
FIL	Filter (if fitted)
TX	Transformer
SW	Instrument Switch
N	Neutral
L1	Live
PE	Earth

9.0 Fuses and Power Settings

9.1 Fuses

F1 - F2: Refer to the circuit diagrams.

F1	Internal Supply Fuses	Fitted if supply cable fitted. Fitted on board to some types of EMC filter.	38 mm x 10 mm type F fitted on EMC filter circuit board(s)
F2	Auxiliary Circuit Fuses	Fitted on board to some types of EMC filter. May be omitted up to 25 Amp/ phase supply rating.	2 Amps glass type F On board: 20 mm x 5 mm Other: 32 mm x 6 mm
	Customer Fuses	Required if no supply cable fitted. Recommended if cable fitted.	See rating label for current; See table below for fuse rating.

Model	Phases	Volts	Supply Fuse Rating (Amps) F1
GP 220	1-phase	200-208	16 A
GP 220	1-phase	220-240	16 A

9.2 Power Settings

The power limit settings (parameter OP.Hi) for this model are voltage dependant. The figures represent the maximum percentage of time that controlled power is supplied to the elements. Do not attempt to “improve performance” by setting a value higher than the recommended values. To adjust the parameter refer to the "Changing the Maximum Output Power" of the control section of the manual.

Volts (V)	208	220	230	240	380	400	415	480
Power (%)	-	100	100	100	-	-	-	-

Please refer to the rating label for product specific information.

10.0 Specifications

Carbolite Gero reserves the right to change the specification without notice.

Model	Max Temp (°C)	Max Power (kW)	Chamber Size			Approx Capacity (l)	Net Weight (kg)
			H	W	D		
General Purpose Ovens; vertical airflow; controls above the chamber							
GP 220A	300	3	610	610	610	227	185
General Purpose Ovens; horizontal airflow; controls beside the chamber							
GP 220B	300	3	305	305	305	227	185

10.1 Environment

The models listed in this manual contain electrical parts and should be stored and used in indoor conditions as follows:

Temperature:	5 °C - 40 °C
Relative humidity:	Maximum 80 % up to 31 °C decreasing linearly to 50 % at 40 °C

Notes

Service Record

Engineer Name	Date	Record of Work

Product Label

The products covered in this manual are only a small part of the wide range of ovens, chamber furnaces and tube furnaces manufactured by Carbolite Gero for laboratory and industrial use. For further details of our standard or custom built products please contact us at the address below, or ask your nearest stockist.

For preventive maintenance, repair and calibration of all furnace and oven products, please contact:

Carbolite Gero Service

Telephone: + 44 (0) 1433 624242

Fax: +44 (0) 1433 624243

Email: ServiceUK@carbolite-gero.com

Carbolite Gero Ltd,

Parsons Lane, Hope, Hope Valley,
S33 6RB, England.

Telephone: + 44 (0) 1433 620011

Fax: + 44 (0) 1433 621198

Email: Info@carbolite-gero.com

www.carbolite-gero.com

Copyright © 2023 Carbolite Gero Limited