CARBOLITE GERO 30-3000°C

Installation, Operation and Maintenance Instructions

1200°C Chamber Furnace - GPC Model: 131 Litres
No Controller

GPC 12/131 + No Controller

MEN-GPC12131-05_NOCTRL (29-10-2021)

part of VERDER scientific

Contents

This manual is for guidance on the use of the Carbolite Gero product specified on the front cover. This manual should be read thoroughly before unpacking and using the furnace or oven. The model details and serial number are shown on the back of this manual. Use the product for the purpose for which it is intended.

1.0 Symbols and Warnings 4
1.1 Switches and Lights 4
1.2 General Warnings 4
1.3 Prerequisites to Use 5
2.0 Installation 6
2.1 Unpacking & Handling 6
2.2 Siting and Setting Up 6
2.3 Hearth 7
2.4 Chimney 8
2.5 Electrical Connections 8
2.6 Voltage and Power Limit 9
3.0 Temperature Controller 11
4.0 Operation 12
4.1 Operating Cycle 12
4.2 General Operating Notes 12
4.3 Use of Probes and Metal Sheathed Thermocouples 13
4.4 Atmospheres 13
4.5 Operator Safety 13
4.6 Power Adjustment 14
5.0 Maintenance 15
5.1 General Maintenance 15
5.2 Maintenance Schedule 15
5.2.1 Cleaning 17
5.3 Safety Switch 17
5.4 Calibration 17
5.5 After-Sales Service 18
5.6 Recommended Spare Parts and Spare Parts Kit 18
6.0 Repairs and Replacements 19
6.1 Safety Warning - Disconnection from Power Supply 19
6.2 Safety Warning - Refractory Fibre Insulation 19
6.3 Temperature Controller Replacement 19
6.4 Solid-State Relay Replacement 20

6.5 Thermocouple Replacement 20
6.6 Element Replacement (Industrial Models) 21
6.7 Fuse Replacement 21

7.0 Fault Analysis 23

A. Furnace Does Not Heat Up 23
B. Product Overheats 24

8.0 Wiring Diagrams 25

8.1 WA-33-30 25
8.2 WA-33-31 26
8.3 WA-U3-30 27
8.4 WA-U3-31 29

9.0 Fuses and Power Settings 31

9.1 Power Settings 31

10.0 Specifications 32

10.1 Environment 32

1.0 Symbols and Warnings

1.1 Switches and Lights

Instrument switch: when the instrument switch is operated the temperature control circuit is energised.

Heat light: the adjacent light glows or flashes to indicate that power is being supplied to the elements.

1.2 General Warnings

DANGER – Electric shock. Read any warning printed next to this symbol.

WARNING: Risk of fatal injury.

DANGER – Hot surface. Read any warning printed next to this symbol.

WARNING: All surfaces of a product may be hot.

DANGER – Read any warning printed next to this symbol.

Caution – Double Pole/Neutral Fusing

1.3 Prerequisites to Use

Prior to the commissioning and use of this product, all personnel involved in its installation, operation and maintenance must be deemed competent and have:

- Read and understood the information contained within this manual
- Received the relevant training with regard to safety and operation of the product
- Been provided with the appropriate PPE (Personal Protective Equipment) required for the safe operation of this product

Note: The customer is responsible for ensuring that all of the above conditions are satisfied before the product is commissioned for use.

Note: Unless otherwise specified, the customer is responsible for the installation of this product and the safe connection of any additional equipment and gas or liquid supply lines.

2.0 Installation

2.1 Unpacking & Handling

When unpacking or moving the product, always lift by its base; do not use the door or any other projecting cover or component to support the equipment when moving it. Use a fork lift or pallet truck to move the product; position the product on a level surface and use an adequate number of personnel to safely move the product into position.

Carefully remove any packing material from inside and around the product before use. Avoid damaging the surrounding insulation when removing packing materials.

NOTE: This product contains Refractory Ceramic Fibre (also known as Alumino Silicate Wool - ASW). For precautions and advice on handling this material see section 6.2.

2.2 Siting and Setting Up

Place the product on a level surface in a well ventilated area.

Site away from other sources of heat and on a non-flammable surface that is resistant to accidental spillage or hot materials.

The surface on which the equipment is mounted should be stable and not subject to movement or vibrations.

The height of the mounting surface is important to avoid operator strain when loading and unloading samples.

Unless otherwise stated elsewhere in this manual, ensure that there is **at least 150 mm** of free space around the back and sides of the product. Clear space is required above the product to dissipate heat.

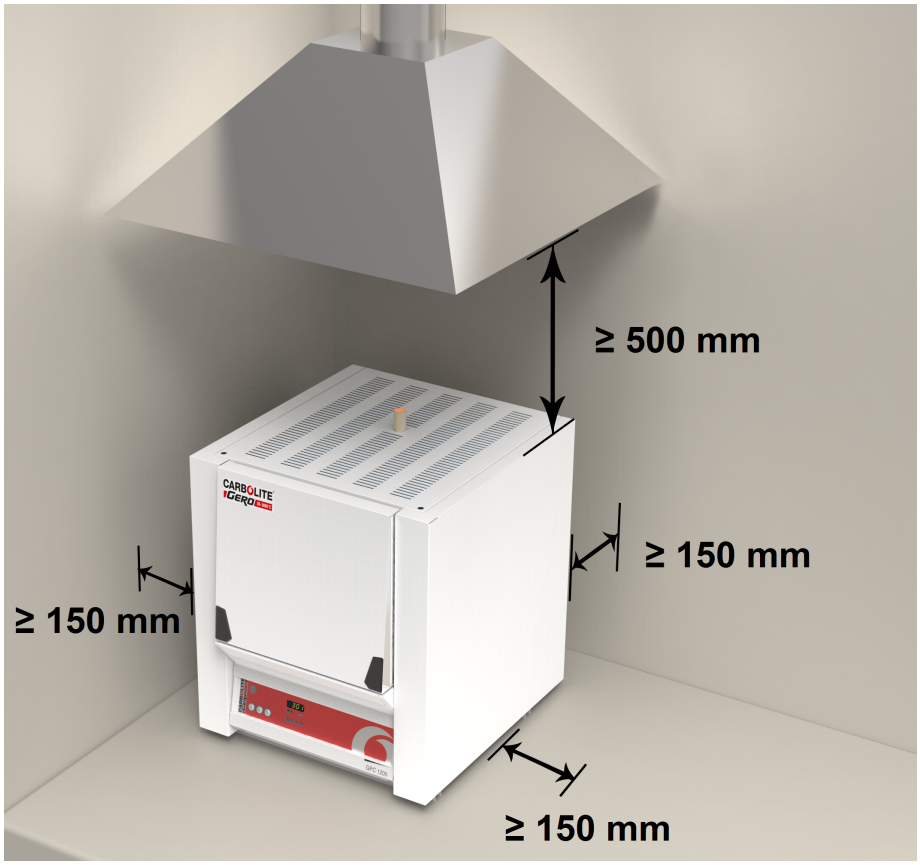

Depending on the application of the product, it may be appropriate to position it under an extraction hood. Ensure the extraction hood is switched on during use.

Ensure that the product is placed in such a way that it can be quickly switched off or disconnected from the electrical supply.

Under no circumstances should any objects be placed on top of the product. Always ensure that any vents on the top of the product are clear of any obstruction. Always ensure all cooling vents and cooling fans (if fitted) are clear of any obstruction.

2.3 Hearth

The product is supplied with the hearth tiles supported in place by a timber batten or steel plate held by a jacking bolt fixed through the roof chimney hole.

To remove, take off the roof panel and unscrew the bracket complete with the jacking rod assembly.

Fit the product chimney before replacing the roof panel.

Fit the door counterbalance weights to the door shaft such that the locking screws lock into the countersunk holes.

Note that one of the weights has a flat surface on the boss opposite the locking screw. This weight goes on the side by the limit switch assembly such that the plunger of the switch is depressed when the door is opened.

2.4 Chimney

The chimney is a length of tubing. If it is supplied unfitted, then fit it through the hole in the top of the case.

If the product is to be used to heat substances that emit fumes, a fume extraction duct of approximately 75 mm - 150 mm inlet diameter may be placed directly above the chimney outlet.

Do not make a sealed connection to the product chimney as this causes excessive airflow through the chamber and results in poor temperature uniformity.

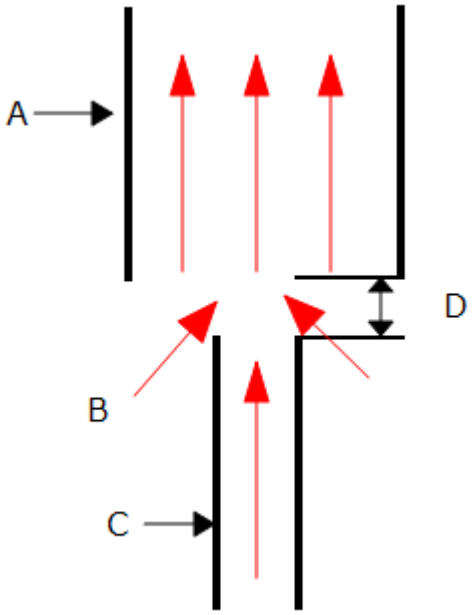

Key	
A	Duct (75mm-150mm diameter)
B	Ambient air is drawn into duct
C	Chimney
D	25mm vertical gap between chimney and duct

2.5 Electrical Connections

Connection by a qualified electrician is recommended.

The model covered in this manual has three internal circuits and is normally supplied for connection to a three phase power supply. This may be either star or delta, but a product must only be connected to the type and voltage of supply for which it was made. If the product is ordered for a single phase supply, this may be Live to Neutral reversible or non-reversible, or Live to Live.

Check the product rating label before connection. The supply voltage should agree with the voltage on the label and the supply capacity should be sufficient for the current on the label.

The supply should be fused at the next size equal to, or higher than the current on the label. This manual contains a table of the most common fuse ratings.

When the mains cable is factory fitted, internal fuses are also fitted. It is essential that the operator ensures that the product is correctly fused.

Products with a factory fitted supply cable are designed to be wired directly to an isolator or fitted with a line plug.

Products without a factory fitted supply cable require a permanent connection to a fused and isolated supply. The product's electrical access panel should be temporarily removed, and connections made to the internal terminals.

When connecting the product to the power supply, the plug or isolating switch should be accessible, easy to remove, and within reach of the operator.

The supply MUST incorporate an earth (ground).

Electrical Connection Details:

Supply	**Terminal Label**	**Cable Colour**	**Supply Types**	
			Live - Neutral	Reversible or Live-Live
1-phase	L1	Brown	to live	to either power conductor (For USA 200-240V, connect L1)
	N / L2	Blue	to neutral	to the other power conductor (For USA 200-240V, connect L2)
	PE	Green/ Yellow	to earth (ground)	to earth (ground)

2- or 3-phase	L1	Black	to phase 1
	L2	Black	to phase 2
	L3	Black	to phase 3 (**except 2-phase**)
	N	Light Blue	to neutral (**except delta**)
	PE	Green/ Yellow	to earth (**ground**)

2.6 Voltage and Power Limit

When first starting up the product, check the setting of the OP.Hi parameter (see the controller instructions) and compare it with the data in section 9.0 towards the back of this manual.

If the power limit setting is incorrect for the voltage of the electrical supply, change it. This must be done immediately if the setting of OP.Hi is higher than it should be.

3.0 Temperature Controller

If this product is fitted with a temperature controller, instructions are provided separately.

4.0 Operation

4.1 Operating Cycle

This product is fitted with an instrument switch which cuts off power to the control circuit.

Connect the product to the electrical supply.

Turn on the instrument switch to activate the temperature controllers. The controllers illuminate and go through a short test cycle.

Over-Temperature option only. If the digital over-temperature option has not yet been set as required, set and activate it according to the over-temperature controller instructions.

The product will heat up according to the controller setpoint or program, unless a time switch is fitted and switched off.

As the product heats up, the heat light glows steadily at first and then flashes as the product approaches the desired temperature. For more information on temperature control see the controller instructions.

Over-Temperature option only. If the over-temperature circuit has tripped, an indicator on the over-temperature controller flashes and the heating elements are isolated. Find and correct the cause before resetting the over-temperature controller according to the instructions supplied.

To turn the product off, set the instrument switch to its off position. The controller display will go blank. If the product is to be left unattended, isolate it from the electrical supply.

4.2 General Operating Notes

Heating element life is shortened by overheating. Do not leave the product at high temperature when it is not required. The maximum temperature is shown on the product rating label and in section 10.0 towards the back of this manual.

When heating large objects, in particular poor conductors, avoid shielding the thermocouple from the heating elements. The thermocouple is intended to sense the temperature near the heating elements. However, if a large object is placed in the chamber it may record the average temperature of the object and the elements, this can lead to overheating of the elements. Allow large objects to gain heat at a lower temperature and then reset the controller to a temperature close to the desired maximum, or heat using a slowly controlled ramp rate. For more information refer to the controller instructions.

When heating materials that produce smoke or fumes, the chimney must be correctly fitted and unobstructed. If not, soot will accumulate in the chamber and could possibly cause an electrical breakdown of the heating element. If the furnace is used to heat

materials that emit smoke or fumes, regularly heat it up to maximum temperature for one hour with the chamber empty to burn away the soot.

Materials such as case hardening compounds and other reactive salts may penetrate the furnace chamber lining and attack the wire elements, causing premature failure. Use of a hearth tile may be advisable: please consult the Carbolite Gero technical department.

4.3 Use of Probes and Metal Sheathed Thermocouples

Any metal object used to probe into the product chamber while the product is connected to the electrical supply must be earthed. This applies in particular to metal sheathed thermocouples, where the sheaths must be earthed. The refractory material of the chamber lining becomes partly conductive at high temperatures and the electric potential inside the chamber can be at any value between zero and the supply voltage. Unearthed probes can cause serious electric shock.

4.4 Atmospheres

When an optional gas inlet is fitted, there is a label near the inlet saying "INERT GAS ONLY". In practice, inert or oxidising gases may be used, but not combustible or toxic gases.

The chamber is not gas tight, the gas usage may be high and the chamber is always likely to contain some air. Residual oxygen of approximately 1% to 2% is to be expected.

4.5 Operator Safety

This product incorporates a safety switch which interrupts the heating element circuit when the furnace is opened. This prevents the operator touching a live heating element and also prevents the product from heating up if the furnace is left open. The operation of this switch should be checked periodically.

Depending on use, the surfaces in the working chamber and the chamber load may still be very hot after the appliance is switched off. Touching these surfaces may cause burns. Use suitable personal protective equipment or wait until the appliance cools down to ambient temperature.

Before removing a hot object from the product, make sure there is a safe place to put it down. If necessary use tongs, face masks and heat resistant gloves. Heat resistant

clothing and face protection can guard against the effects of radiated heat when the furnace is open.

When the product is opened during operation there is considerable radiated heat. Do not keep any flammable objects near the product, nor objects which could be damaged by radiated heat.

4.6 Power Adjustment

The product control system incorporates electronic power limiting. Depending on the model and the destination country the power limit maybe set to 100% or a lower figure. Where appropriate the power limit parameter OP.Hi is accessible to the operator, but it should not generally be altered.

See section 9.0 for details of the power limit settings. DO NOT adjust the power to a level higher than the design level states; this may cause a fuse to blow and could damage the heating elements.

The power limit may be set to a lower limit if the product is to be used at a low temperature only: this may give better control stability. It may be set to zero to permit demonstration of the controls without the heating elements taking power; to resume heating reset it to its standard value.

5.0 Maintenance

5.1 General Maintenance

Preventive rather than reactive maintenance is recommended. The type and frequency depends on the product use; the following are recommended.

5.2 Maintenance Schedule

CUSTOMER
QUALIFIED PERSONNEL

DANGER! ELECTRIC SHOCK. Risk of fatal injury. Only electrically qualified personnel should attempt these maintenance procedures.

Maintenance Procedure	Method	Frequency				
		Daily	Weekly	Monthly	Bi-Annually	Annually
Safety						
Safety Switch Function	Set a safe temperature above ambient, and open the door to see if the heater light goes out		CUSTOMER			
Safety Switch Function	Electrical measurement					QUALIFIED PERSONNEL
Over-Temperature Safety Circuit (if fitted)	Set an over-temperature setpoint lower than the displayed temperature and check for an over-temperature alarm as detailed in this manual		CUSTOMER			
Over-Temperature Safety Circuit (if fitted)	Electrical measurement					QUALIFIED PERSONNEL
Door Plug	Visual inspection, checking the seal and whether it is free of damage		CUSTOMER			
Door Plug	Replacement where necessary					QUALIFIED PERSONNEL
Chimney / Extraction	Check and clean if necessary			CUSTOMER		QUALIFIED PERSONNEL
Electrical Safety (external)	Visual check of external cables and plugs			CUSTOMER		
Electrical Safety (internal)	Physically check all connections and cleaning of the power plate area					QUALIFIED PERSONNEL
Function						
Temperature Calibration	Tested using certified equipment, frequency dependent on the standard required			CUSTOMER	CUSTOMER	QUALIFIED PERSONNEL

Operational Check	Check that all functions are working normally					
Operational Check	Thorough inspection and report incorporating a test of all functions					
Performance						
Element Circuit	Electrical measurement					
Power Consumption	Measure the current drawn on each phase / circuit					
Hearth	Visual check for fit and damage					
Cooling Fans (if fitted)	Check whether the cooling fans are working					

5.2.1 Cleaning

Soot deposits may form inside the furnace, depending on the process. At appropriate intervals remove these by heating as indicated in the General Operation Notes.

The product's outer surface may be cleaned with a damp cloth. Do not allow water to enter the interior of the case or chamber. Do not clean with organic solvents.

5.3 Safety Switch

When correctly functioning, the safety switch will isolate all live conductors (live and neutral connections) within the heating element circuit(s) when the product door is opened. The safety switch should be checked regularly to ensure that this occurs.

The safety switch should not fail under normal working conditions, however rough handling, exposure to corrosive materials/ environments, or exceptionally frequent use, could compromise the safety system.

Weekly check:

The following check can be carried out by a general operator:

- On the temperature controller, set a safe temperature above ambient. The heater lights should illuminate.
- Open the door and check the heater lights. They should no longer be illuminated.

If the heater lights remain illuminated when the door is open, discontinue use and contact Carbolite Gero Service.

Annual check:

The following checks should be carried out by a qualified electrician, as specified in the "Maintenance Schedule" section of this manual:

- Remove the element access panel and take a voltage measurement from the heating element terminals. Do not attempt to take a reading from the heating element itself as surface oxidation will give an unreliable contact.
- Ensure that power to the heating elements is switched off when the door is opened.

Contact Carbolite Gero Service and discontinue use of the product if it is found that the heating elements are not fully isolated during these checks.

5.4 Calibration

After prolonged use, the controller and/or thermocouple may require recalibration. This is important for processes that require accurate temperature readings or for those that

use the product close to its maximum temperature. A quick check using an independent thermocouple and temperature indicator should be made from time to time to determine whether full calibration is required. Carbolite Gero can supply these items.

Depending on the controller fitted, the controller instructions may contain calibration instructions.

5.5 After-Sales Service

Carbolite Gero Service has a team of Service Engineers who can offer repair, calibration and preventive maintenance of furnace and oven products both at the Carbolite Gero factory and at customers' premises throughout the world. A telephone call or email often enables a fault to be diagnosed and the necessary parts to be despatched.

In all correspondence please quote the serial number and model type given on the rating label of the product. The serial number and model type are also given on the back of this manual when supplied with the product.

Carbolite Gero Service and Carbolite Gero contact information can be found on the back page of this manual.

5.6 Recommended Spare Parts and Spare Parts Kit

Carbolite Gero can supply individual spare parts or a kit of the items most likely to be required. Ordering a kit in advance can save time in the event of a breakdown.

Each kit consists of one thermocouple, one sheath, one solid state relay and set of elements.

When ordering spare parts please quote the model details as requested above.

6.0 Repairs and Replacements

6.1 Safety Warning - Disconnection from Power Supply

Immediately switch the product off in the event of unforeseen circumstances (e.g. large amount of smoke). Allow the product to return to room temperature before inspection.

Always ensure that the product is disconnected from the electrical supply before repair work is carried out.

Caution: Double pole/neutral fusing may be used in this product.

6.2 Safety Warning - Refractory Fibre Insulation

Insulation made from High Temperature Insulation Wool

Refractory Ceramic Fibre, better known as (Alumina silicate wool - ASW).

This product contains **alumino silicate wool** products in its thermal insulation. These materials may be in the form of blanket or felt, formed board or shapes, slab or loose fill wool.

Typical use does not result in any significant level of airborne dust from these materials, but much higher levels may be encountered during maintenance or repair.

Whilst there is no evidence of any long term health hazards, it is strongly recommended that safety precautions are taken whenever the materials are handled.

Exposure to fibre dust may cause respiratory disease.

When handling the material, always use approved respiratory protection equipment (RPE-eg. FFP3), eye protection, gloves and long sleeved clothing.

Avoid breaking up waste material. Dispose of waste in sealed containers.

After handling, rinse exposed skin with water before washing gently with soap (not detergent). Wash work clothing separately.

Before commencing any major repairs it is recommended to make reference to the European Association representing the High Temperature Insulation Wool industry (www.ecfia.eu).

Further information can be provided on request. Alternatively, Carbolite Gero Service can quote for any repairs to be carried out either on site or at the Carbolite Gero factory.

6.3 Temperature Controller Replacement

Refer to the controller instructions for more information on how to replace the temperature controller.

6.4 Solid-State Relay Replacement

Disconnect the product from the power supply and remove the appropriate cover as given above.

1. Make a note of the wire connections to the solid state relay, then disconnect them.
2. Remove the solid state relay from the base panel or aluminium plate.
3. Replace and reconnect the solid state relay ensuring that the bottom of it has good thermal contact with the base panel or aluminium plate.
4. Replace the access panel.

6.5 Thermocouple Replacement

Disconnect the product from the power supply. Remove the appropriate panel to gain access to the thermocouple connections. Make a note of the thermocouple connections.

Thermocouple cable colour codings are:

Thermocouple leg	Colour
positive (type R)	orange
negative	white

Disconnect the thermocouple from its terminal block and withdraw the thermocouple from its sheath by bending the metal tag or releasing the screw to release. It is also advisable to remove the sheath and shake out any broken pieces of thermocouple.

Re-assemble with a new thermocouple, observing the colour coding, ensuring that the thermocouple is not twisted as it is being inserted and that the metal tag is bent back to grip the sheath.

Refit the element access panel.

6.6 Element Replacement (Industrial Models)

See section 6.2 - wearing a face mask is required.

This operation requires two people and a cold product. Check that the door counter weights hold the door up safely.

The chambers contain 12 off IAP tubes on which the 6 "hairpin" elements are mounted. The elements operate from back-to-front-to-back. The connections are accessed by removal of the upper back panel. The front end of the hairpin is restrained from sliding along the tubes by a hook.

Disconnect the product from the electrical supply and remove the back panel.

It is advisable to make a written plan showing all the element and thermocouple connections to avoid any problems when reconnecting to the power and other wires.

Loosen the clamping screws onto the terminal blocks holding the faulty element. Use two spanners to avoid cracking the porcelain material. If necessary straighten the bent ends of the wire. This must be done for both ends of the element, i.e. for two adjacent terminal blocks.

Withdraw the tube on which the wire spiral is mounted, through the back. The second person should assist by supporting the tube within the chamber and easing the element off it.

From within the chamber, lift the wire element off the hook holding the front end and remove the element through the furnace door.

Fit the new element. At the same time one person should feed the tubes through from the back and the other should feed the wire spirals onto the tube.

To get the wire ends through correctly it may help to feed a flexible plastic or nylon tube, with a bore just larger than the element wire, through the terminal block into the chamber. Fit the element wire into this tube; as the tube is withdrawn, the element feeds through the terminal block.

Finally locate the element correctly. At the front, connect the hook. At the back, ensure that the last turn of the spiral is approximately one turn away from the insulation. Then tighten the terminal block screws.

If necessary, cut off any excess wire.

Refit the back panel.

Check that the product is controlling properly to rule out the possibility that the previous element failed because of a fault elsewhere in the control circuit.

6.7 Fuse Replacement

Fuses are marked on the wiring diagram with type codes, e.g. F1, F2. For more information on fuses refer to section 9.0.

Depending on model and voltage, the different fuse types may or may not be fitted.

If any fuse has failed, it is advisable for an electrician to check the internal circuits.

Replace any failed fuses with the correct type. For safety reasons do not fit larger capacity fuses without first consulting Carbolite Gero.

The fuses are located at the cable entry point. Remove the back panel or control box back panel to gain access to the fuses.

7.0 Fault Analysis

A.	Furnace Does Not Heat Up				
1.	The HEAT light is ON	▶	The heating element has failed	▶	Check also that the SSR is working correctly
2.	The HEAT light is OFF	▶	The controller shows a very high temperature or code such as S.br	▶	The thermocouple has broken or has a wiring fault
		▶	The controller shows a low temperature	▶	The door switch(es) (if fitted) may be faulty or need adjustment
				▶	The contactor/relay (if fitted) may be faulty
				▶	The heater switch (if fitted) may be faulty or need adjustment
				▶	The SSR could be failing to switch on due to internal failure, faulty logic wiring from the controller, or faulty controller
		▶	There are no lights glowing on the controller	▶	Check the supply fuses and any fuses in the furnace control compartment
				▶	The controller may be faulty or not receiving a supply due to a faulty switch or a wiring fault.

B.	Product Overheats				
1.	Product only heats up when the instrument switch is ON	▶	The controller shows a very high temperature	▶	The controller is faulty
		▶	The controller shows a low temperature	▶	The thermocouple may be faulty or may have been removed out of the heating chamber
				▶	The thermocouple may be connected the wrong way around
				▶	The controller may be faulty
2.	Product heats up when the instrument switch is OFF	▶	The SSR has failed "ON"	▶	Check for an accidental wiring fault that could have overloaded the SSR

8.0 Wiring Diagrams

In all models the safety switch in the diagram is a positive-break door switch.

EMC Filters (if fitted): dependent on the model there may be one filter, or more than one fitted in parallel. The circuit diagram examples do not show multiple filter arrangements.

ISOLATOR: the industrial models have an internal isolator which is not shown in these diagrams.

8.1 WA-33-30

Connections below show 3-phase +N with indirect safety switches.

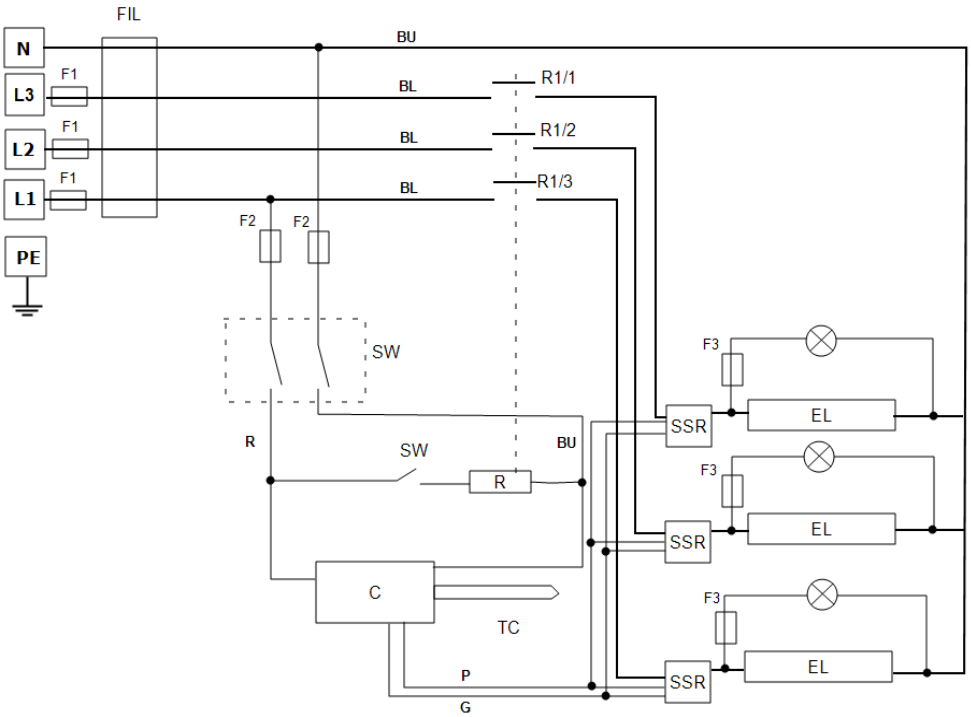

Key	
F1, F2, F3	Fuses
FIL	Filter (if fitted)
C	Controller
TC	Control Thermocouple
R	Relay
R1/1, R1/2, R1/3	Relay contactor
SW	Instrument Switch(es)
SSW	Safety Switch
EL	Element
SSR	Solid State Relay
N	Neutral
L	Live
PE	Earth

Cables	
BU	Blue
R	Red
BL	Black
GR/Y	Green + Yellow
G	Grey
P	Pink

8.2 WA-33-31

Connections below show 3-phase +N with indirect safety switches and over-temperature control.

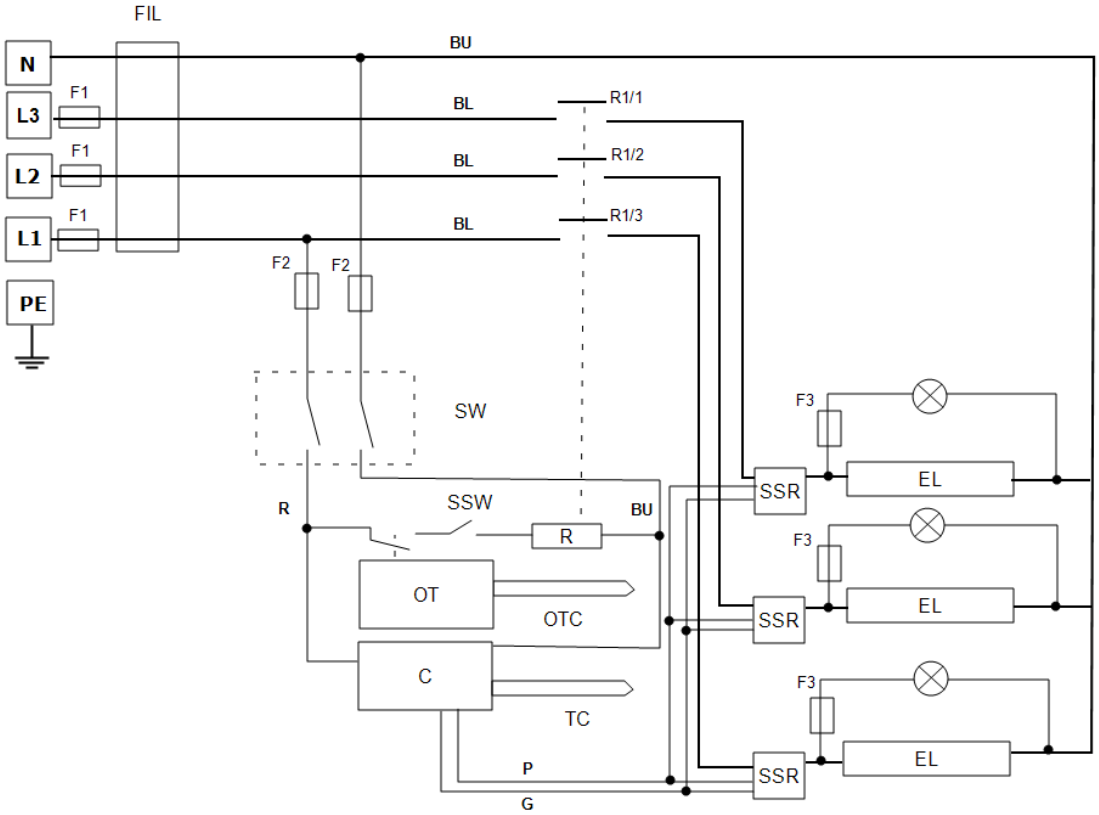

Key	
F1, F2, F3	Fuses
FIL	Filter (if fitted)
C	Controller
TC	Control Thermocouple
OT	Over-Temperature Controller
OTC	Over-Temperature Thermocouple
R	Relay
R1/1, R1/2, R1/3	Relay contactor
SW	Instrument Switch(es)
SSW	Safety Switch
EL	Element
SSR	Solid State Relay
N	Neutral
L	Live
PE	Earth

Cables	
BU	Blue
R	Red
BL	Black
GR/Y	Green + Yellow
G	Grey
P	Pink

8.3 WA-U3-30

Connections below show 3-phase +N with indirect safety switches.

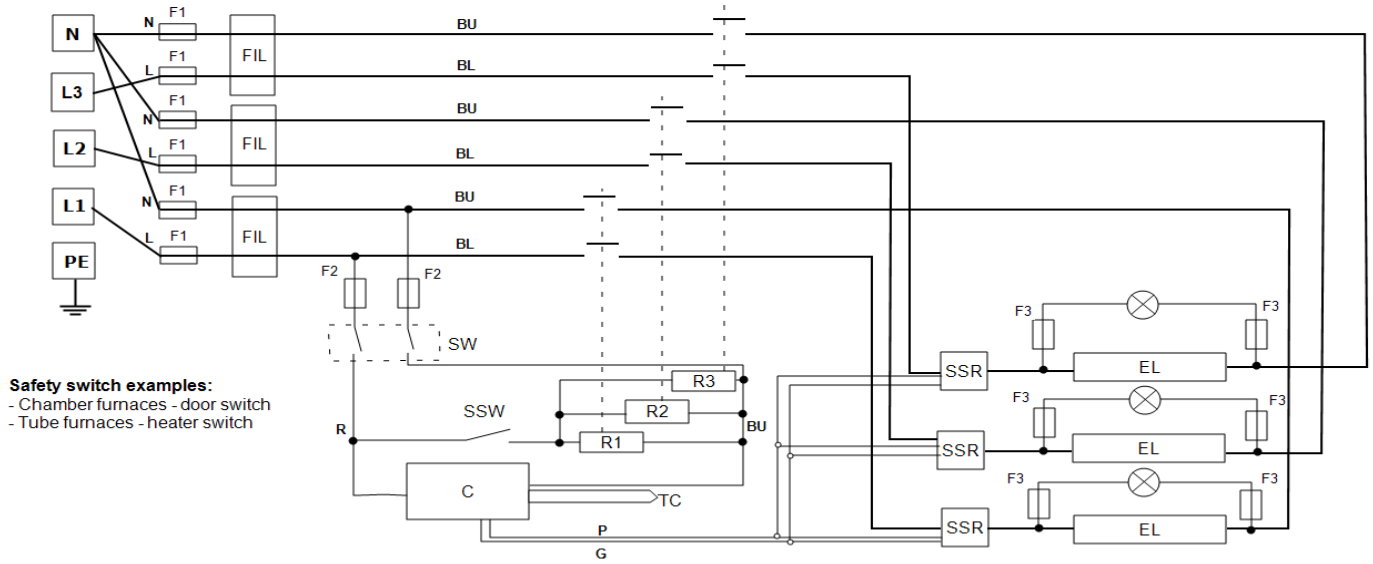

See below for other configurations

Single Phase Connections

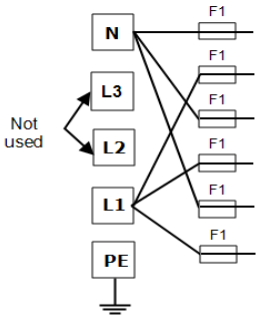

Delta Connections

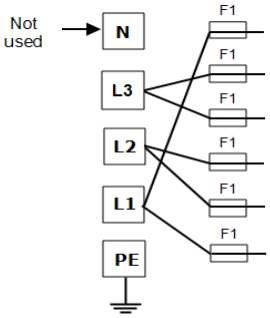

Key	
F1, F2, F3	Fuses
FIL	Filter (if fitted)
C	Controller
TC	Control Thermocouple
R1, R2, R3	Relay
R1/1, R1/2, R2/1, R2/2, R3/1, R3/2	Relay contactor
SW	Instrument Switch(es)
SSW	Safety Switch
EL	Element
SSR	Solid State Relay
N	Neutral
L	Live
PE	Earth

Cables	
BU	Blue
R	Red
BL	Black
GR/Y	Green + Yellow
G	Grey
P	Pink

Products with this wiring arrangement may be converted between the following supply voltages (please refer to the table within section 9.0 for compatible phases with the product):

- 3-phase + neutral in the range 380/220 V - 415/240 V
- 3-phase delta in the range 220 V - 240 V
- Single phase in the range 220 V - 240 V
- *208 V model*: *can be converted between 208 V delta and 208 V 1-phase*

Please contact Carbolite Gero Service for details.

8.4 WA-U3-31

Connections below show 3-phase +N with safety switches and over-temperature control.

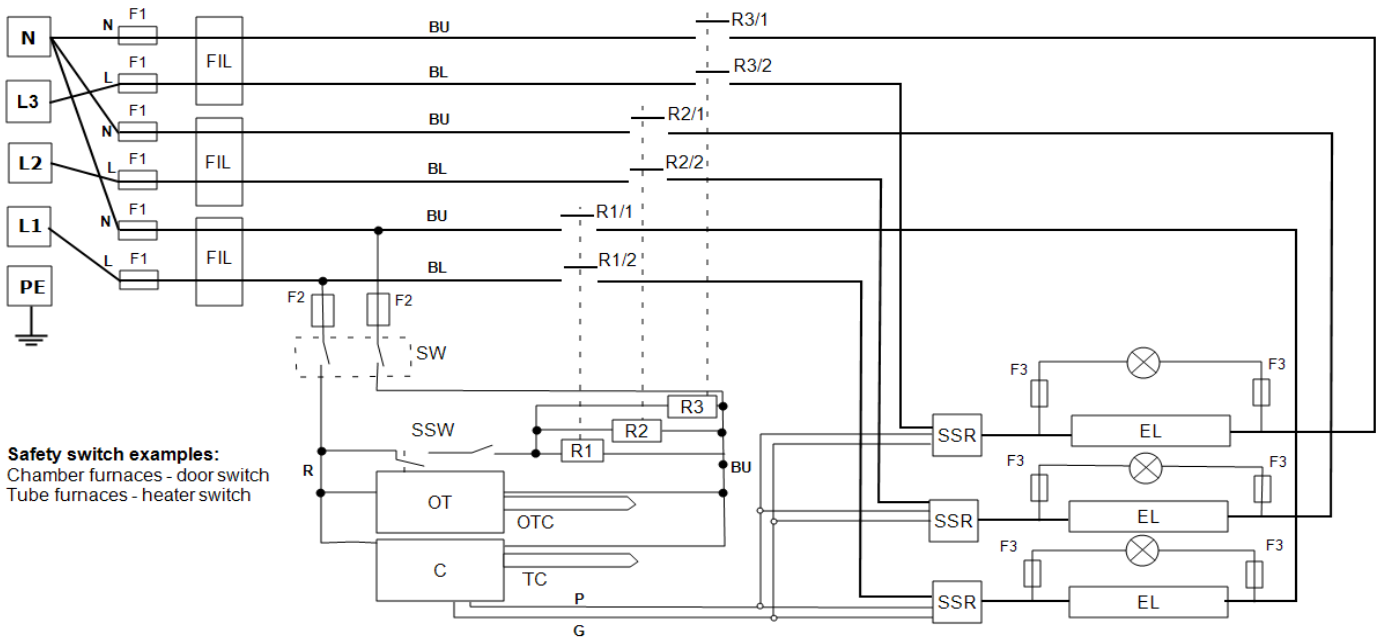

See below for other configurations

Single Phase Connections

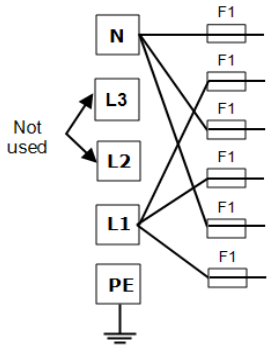

Delta Connections

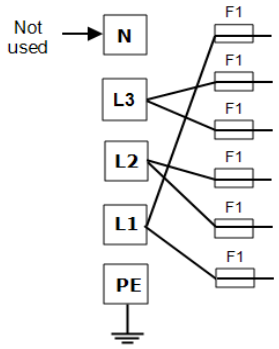

Key	
F1, F2, F3	Fuses
FIL	Filter (if fitted)
C	Controller
TC	Control Thermocouple
OT	Over-Temperature Controller
OTC	Over-Temperature Thermocouple
R1, R2, R3	Relay
R1/1, R1/2, R2/1, R2/2, R3/1, R3/2	Relay contactor
SW	Instrument Switch(es)
SSW	Safety Switch
EL	Element
SSR	Solid State Relay
N	Neutral
L1, L2, L3	Live
PE	Earth

Cables	
BU	Blue
R	Red
BL	Black
GR/Y	Green + Yellow
G	Grey
P	Pink

Products with this wiring arrangement may be converted between the following supply voltages (please refer to the table within section 9.0 for compatible phases with the product):

- 3-phase + neutral in the range 380/220 V - 415/240 V
- 3-phase delta in the range 220 V - 240 V
- Single phase in the range 220 V - 240 V
- *208 V model*: *can be converted between 208 V delta and 208 V 1-phase*

Please contact Carbolite Gero Service for details.

9.0 Fuses and Power Settings

F1 - F3: Refer to the circuit diagrams.

F1	Internal Supply Fuses	Fitted if supply cable fitted. Fitted on board to some types of EMC filter.	38 mm x 10 mm type F fitted on EMC filter circuit board(s)
F2	Auxiliary Circuit Fuses	Fitted on board to some types of EMC filter. May be omitted up to 25 Amp/ phase supply rating.	2 Amps glass type F On board: 20 mm x 5 mm Other: 32 mm x 6 mm
F3	Heat Light Fuses	May be omitted up to 25 Amp/ phase supply rating.	2 Amps glass type F 32 mm x 6 mm
	Customer Fuses	Required if no supply cable fitted. Recommended if cable fitted.	See rating label for current; See table below for fuse rating.

Model	Phases	Volts	Supply Fuse Rating
GPC 12/131	3-phase + N	220-240/380-415 V	40 A/ ph
GPC 12/131	3-phase delta	220-240 V	50 A/ ph

9.1 Power Settings

The power limit settings (parameter OP.Hi) for this model are voltage dependant. The figures represent the maximum percentage of time that controlled power is supplied to the elements. Do not attempt to “improve performance” by setting a value higher than the recommended values. To adjust the parameter refer to the "Changing the Maximum Output Power" of the control section of the manual.

Voltage:	200 V	208 V	220 V 380 V	230 V 400 V	240 V 415 V	440 V	460 V	480 V
Power (%)	-	-	100	100	95	84	77	71

Please refer to the rating label for product specific information.

10.0 Specifications

Carbolite Gero reserves the right to change the specification without notice.

Model	Max Temp (°C)	Max Power (kW)	Chamber Size			Approx Capacity (l)	Net Weight (kg)
			H	W	D		
Chamber furnaces heated by resistance wire resting on refractory formers.							
GPC 12/131	1200	24	350	500	700	131	400

10.1 Environment

The models listed in this manual contain electrical parts and should be stored and used in indoor conditions as follows:

Temperature:	5 °C - 40 °C
Relative humidity:	Maximum 80 % up to 31 °C decreasing linearly to 50 % at 40 °C

Notes

Service Record

Engineer Name	Date	Record of Work

Product Label

The products covered in this manual are only a small part of the wide range of ovens, chamber furnaces and tube furnaces manufactured by Carbolite Gero for laboratory and industrial use. For further details of our standard or custom built products please contact us at the address below, or ask your nearest stockist.

For preventive maintenance, repair and calibration of all furnace and oven products, please contact:

Carbolite Gero Service

Telephone: + 44 (0) 1433 624242

Fax: +44 (0) 1433 624243

Email: ServiceUK@carbolite-gero.com

Carbolite Gero Ltd,

Parsons Lane, Hope, Hope Valley,
S33 6RB, England.

Telephone: + 44 (0) 1433 620011

Fax: + 44 (0) 1433 621198

Email: Info@carbolite-gero.com

www.carbolite-gero.com

Copyright © 2021 Carbolite Gero Limited