CARBOLITE®
a VERDER company

CHAMBER FURNACE, METAL INSULATION

HTK

carbolite.com/products/vacuum-furnace/chamber-furnaces/htk-mo-htk-w/

HTK

CHAMBER FURNACE, METAL INSULATION

The metallic HTK range of Carbolite high temperature furnaces consists of metal heaters made of Molybdenum or Tungsten.

The HTK series, made of metal, is available in four distinct sizes. The smaller HTKs with capacities of 8 and 25 liters are usually used in laboratories for research and development. The larger 80 and 120-litre furnaces are mostly utilized as pilot manufacturing systems or for large-scale production. The front door design of these furnaces allows for easy loading and unloading.

The metallic furnaces are constructed using tungsten (HTK W) or molybdenum (HTK MO), resulting in the highest possible purity of the inert atmosphere and final vacuum level. Upon request, a high vacuum upgrade is available. The most commonly used gases include Nitrogen, Argon, Hydrogen, and its mixtures.

The HTK series features heating elements and insulation made of either tungsten (HTK W) or molybdenum (HTK MO). A retort can be utilized to guide the gas flow, particularly for debinding applications or to enhance temperature uniformity. The maximum temperature for the HTK W is 2200 °C, while for the HTK MO, it is 1600 °C.

HTK metal-insulated chamber furnace

Product Video: Chamber furnace, metal insulation - HTK

APPLICATION EXAMPLES

carbon free atmosphere, metal injection moulding (MIM), metallization, sintering, thermal debinding prior to sintering, pyrolysis, synthesis, annealing, tempering

HTK

STANDARD FEATURES AND OPTIONS

- Metallic furnaces provide a precisely defined atmosphere with the highest possible purity
- Metallic furnaces offer the best possible vacuum
- Hydrogen partial pressure operation is optional available
- Data recording for quality management: CC-TP1200 smart, CC-TP1900 or CC-IPC1900
- The HTK series can be supplied in compliance with AMS-2750 requirements
- Option for debinding processes
- Option for clean high vacuum processes

REQUIRED INFRASTRUCTURE

- Gases: hydrogen, argon, nitrogen
- Electric power supply
- Fail safe cooling water
- Exhaust

HTK 8

8-litre chamber furnace for laboratory research and development.

HTK 25

25-litre chamber furnace for laboratory research and development.

HTK 80

80-litre system for pilot manufacturing or large-scale production.

HTK

FURNACE CONFIGURATIONS

Furnace type	Usable volume	Max temp	Heated zones	Debinding option
HTK 8 MO/W	8	1600 °C / 2200 °C	1	Torch/ condensate trap
HTK 25 MO/W	25	1600 °C / 2200 °C	1	Torch/ condensate trap
HTK 80 MO	80	1600 °C	4	Torch/ condensate trap
HTK 120 MO	120	1450 °C	4	Torch/ condensate trap

HTK

RETORT AND SAMPLE RACKS

	HTK 8	HTK 25	HTK 80	HTK 120
Usable space in the retort H x W x D [mm]	160 x 180 x 180	240 x 240 x 400	380 x 410 x 500	380 x 400 x 770
Number of plates*	3	3	40	60
Plate dimensions [sqr. cm] *	225	860	930	930

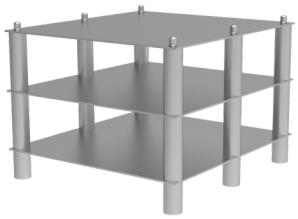

HTK 8 rack

HTK 25 rack

HTK 80 rack

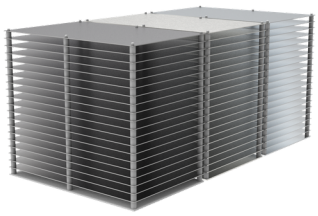

HTK 120 rack

HTK

DEBINDING AND SINTERING

The HTK-MIM-3 furnace program enables debinding and sintering of MIM components in two stages. The program's progress is displayed in a diagram, and important parameters such as pressure, gas flow, and gas type are recorded. The debinding stage utilizes partial pressure and high nitrogen gas flow, while the sintering stage focuses on temperature uniformity, resulting in a consistent density of the MIM parts.

INSIDE THE FURNACE: HTK 8 – 80

- 1 | Heaters
- 2 | Retort
- 3 | Radiation Shields
- 4 | Thermocouple
- 5 | Gas Inlet
- 6 | Gas Outlet
- 7 | Vacuum Gauge
- 8 | Water-cooled vacuum vessel

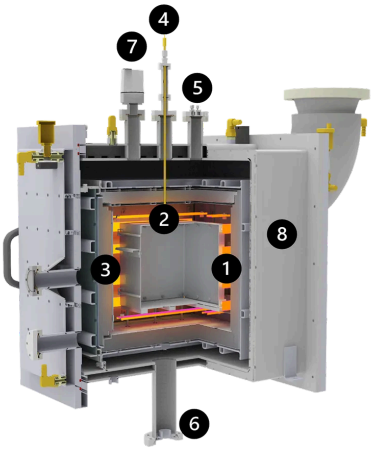

Exemplary cross section of a HTK 8 molybdenum

INSIDE THE FURNACE: HTK 120

- 1 | Heaters
- 2 | Radiation Shields
- 3 | Gas inlet
- 4 | Gas Outlet

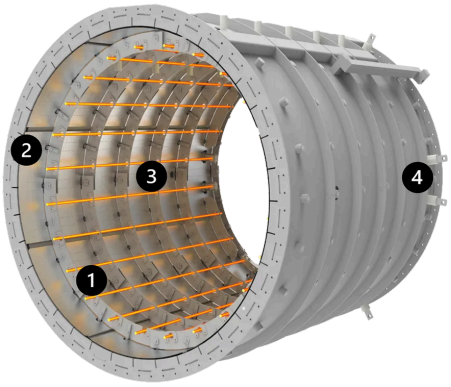

Heating cassette of the HTK 120, CAD drawing. Designed for highest lifetime and easy maintenance.

HTK

BINDER HANDLING OPTIONS HTK 8 – 80

The torch of the afterburner ensures controlled conversion of remaining flammable or toxic volatiles into non-flammable gases.

The condensate trap may be installed for binder handling. During the process the trap is cooled to condense the binder. After the process the trap can be heated to release the binder safely which has been liquified.

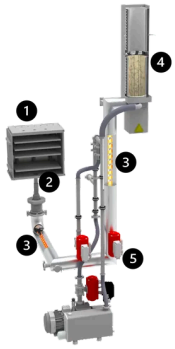

Afterburner

HTK

SOME HTK 120 OPTIONS

AFTERBURNER ASSEMBLY

- 1 | Gas outlet
- 2 | Trace heating
- 3 | Torch
- 4 | Position controlled ball valve
- 5 | Fresh oil pump
- 6 | Oil condenser

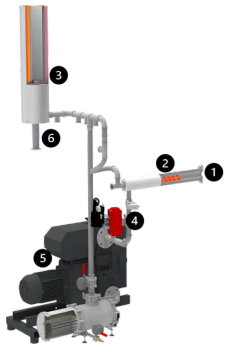

Heated gas outlet and vacuum line of the HTK 120

Stand alone safety purge tank

Debinding and Sintering process steps of the HTK-MIM-3 furnace Explained

HTK

LEAKAGE RATE RESULTS

With the high vacuum upgrade the leakage rate results in values below 10-3 mbar*l/s. The leakage rate is determined by evacuating the furnace, closing all valves and meassuring the pressure increase over time. The desorption of water molecules from the metal surface takes approximately 20 h, and leads to a faster increase in pressure, represented by the blue line.

PUMP DOWN CURVE

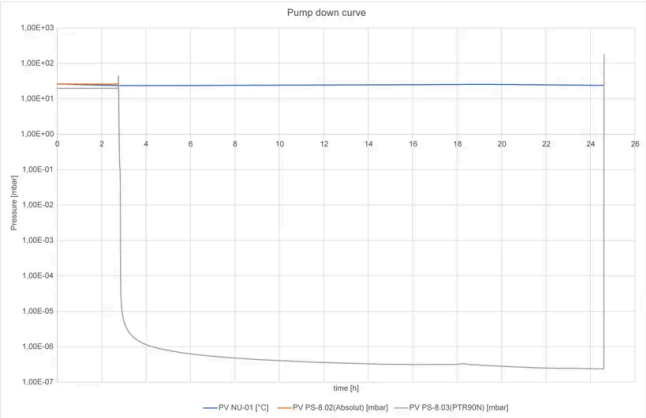

LEAKAGE RATE

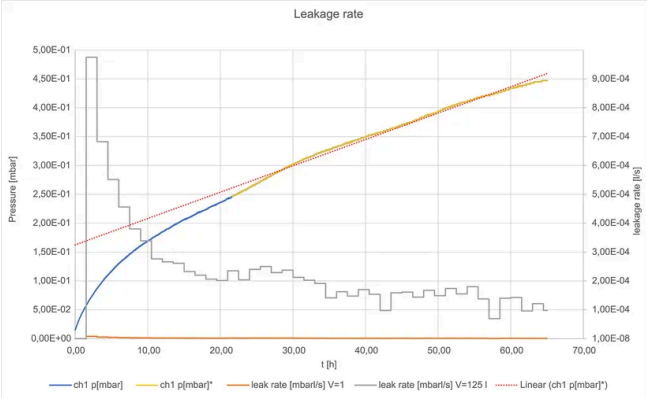

Measured under controlled laboratory conditions. Results may vary depending on process-specific variables, e.g. gas flow rates, vacuum levels, and sample material, size/density.

HTK

HIGH VACUUM APPLICATIONS

Cross section of HTK 8 with high vacuum upgrade. The turbo pump is at least connected via an DN100 flange.

- 1 | Turbo pump
- 2 | Vacuum valve
- 3 | DN 100 flange

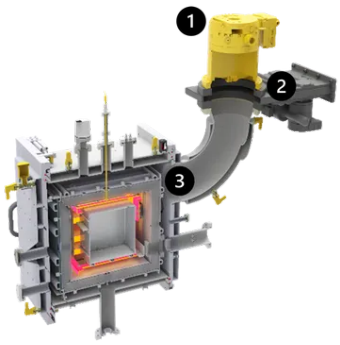

High vacuum upgrade

HTK

CONTROLLER OPTIONS

The furnace is operated via a 12" or 19" touch panel controller. It provides an overview of the furnace and its behaviors and allows the user to preform any possible adjustments to the furnace.

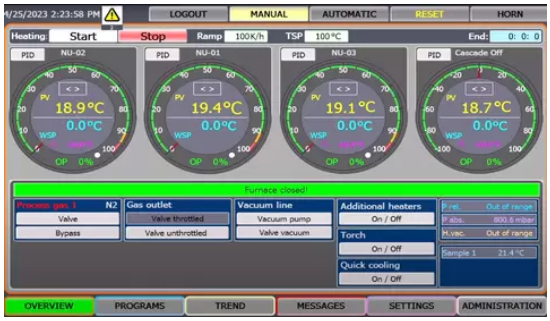

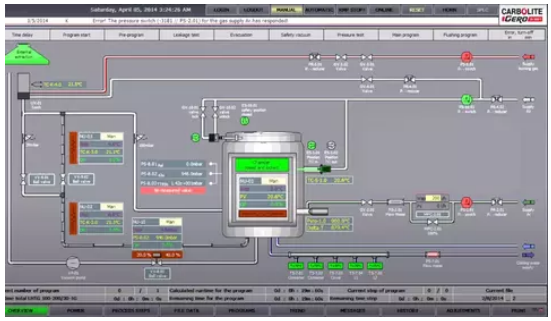

TP1200 SMART

- User friendly 12” touch panel, provides a detailed overview of the furnace status.
- Configuration of an automatic programm
- The smart software is mainly used for simple processes
- The full automatic function ensures full flexibility
- The pre-program ensures that the furnace is evacuated prior to heat treatment to ensure safety in case of any occuring errors
- The system is based on an industrial standard Siemens PLC ensuring full safety.

TP1900 / CC-IPC1900

- Full visualization of the furnace with 19’’ touch panel, mainly for fully configured units or for the use of hydrogen (>5%)
- Configuration of an automatic program
- The automatic software is used for more complicated and hydrogen processes
- The CC-IPC1900 version additionally includes an industrial PC with standard windows software
- The system is based on an industrial standard Siemens F-PLC ensuring full safety even for hydrogen applications
- The pre-program ensures a fully automated leakage test which takes place in overpressure and vacuum

HTK

EXAMPLES

HTK 8 MO/16-2G smart 8 L usable volume, 1600 °C, Argon, Forming gas

HTK 25 W/22-1G automatic 25 L usable volume, 2200 °C, Argon

HTK 80 MO/16-3G automatic 80 L usable volume, 1600 °C, Argon, Nitrogen, and optional hydrogen equipment

HTK 120 MO/14-3G automatic 120 L usable volume, 1400 °C, Argon, Nitrogen, Hydrogen, and partial pressure option

HTK

CHAMBER FURNACE DESIGN

Chamber furnaces are quite easy to load and unload, due to the front loading concept. Smaller furnace can be loadaed manually, bigger units can be loaded by a manual fork lift. The rectangular design of the water cooled vacuum vessels allows the unit be be designed highly compact. This is why the units do not require much space in the workshop and are perfectly suited for laboratories. All HTK type furances are mounted on a single frame and can be easily delivered to customers all over the world. However, for bigger furnace volumes, the vessel is designed cylindrical, as for the HTK 120.

A schematic of a turbomolecular pump for high vacuum applications.

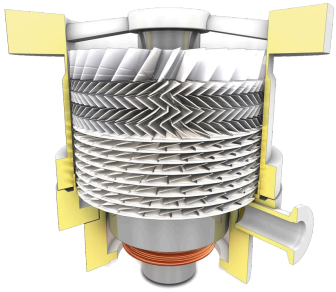

HTK

FREQUENTLY ASKED QUESTIONS

IS A GRAPHITE FURNACE BETTER?

This depends on the process. Some materials, such as stainless steel, 316L, titanium etc. cannot be heat treated in a graphite furnace, especially when the performance of the part is of importance. In such a case metallic furnaces are recommended due to their high purity atmospheres as well as hydrogen and high vacuum abilities.

WHY DOES HYDROGEN HEAT TREATMENT REQUIRE A METALLIC FURNACE?

In a graphite furnace, hydrogen would react with the graphite heating elements and insulation above 1000 °C. The higher the temperature, the faster the graphite parts wear which generates hydrocarbons and causes reactions with the sample. In a metallic furnace the resulting atmospthere is pure.

WHY IS THE INSULATION MADE FROM TUNGSTEN OR MOLYBDENUM?

The lower the variaty of materials inside the furnace chamber, the less is the cross-contamination inside the furnace. This leads to a purer atmosphere within the furnace. Furthermore, the working vacuum is better, due to high boiling points and low vapour pressure of the bespoken metals. The Carbolite vacuum furnace design consists of multiple layers of radiation shields to ensure very low energy consumption. Those layers act like a “mirror” reflecting the thermal radiation, hence insulating the furance. The remaining heat is taken away by cooling water surrounding the vacuum vessel.

WHAT IS THE ADVANTAGE OF (HYDROGEN) PARTIAL PRESSURE?

Carbolite enables adjustable pressure levels between 10 and 1000 mbar. With a variable pressure, the customer can adjust the gas density and therefore the Reynolds number as desired. This ensures a positve gas flow under reduced pressure, evaportating the binder at lower temperatures. This is advantageous for many applications. However, hydrogen partial pressure requires a lot expertise in order to handle it safely. We use dedicated software and hardware solutions to ensure full safety under these conditions.

HTK

TECHNICAL DATA / MOLYBDENUM

Parameter	HTK 8 MO/16-1G	HTK 25 MO/16-1G	HTK 80 MO/16-1G
Insulation material	Molybdenum	Molybdenum	Molybdenum
Dimensions: External H x W x D (mm)	2100 x 1300 x 1100	2200 x 1900 x 1800	2300 x 2100 x 2200
Transport weight (kg)	1200	1700	2000
Volume (litres)	8	25	80
H x W x D usable space without retort (mm)	200 x 200 x 200	250 x 250 x 400	400 x 400 x 500
H x W x D usable space with retort (mm)	200 x 180 x 180	230 x 230 x 400	380 x 380 x 500
Tmax vacuum (°C)	1600	1600	1600
-Delta-T between 500 and 1500°C (K) according to DIN 17052	± 5	± 5	± 5
Max. heat-up rate (K/min)	10	10	10
Cooling time (h)	6	6	8
Power (kW)	30	80	100
Voltage (V)	400	400 (3P)	400 (3P)
Current (A)	75	3x 120	3x 150
Series fuse (A)	3x 100	3x 160	3x 200
Leakage rate - clean, cold and empty (mbar l/s)	5x10-3	5x10-3	5x10-3
Vacuum range depending on the pumping unit	rough, fine or high vacuum	rough, fine or high vacuum	rough, fine or high vacuum
Cooling water volume (l/min)	40	70	100
Max entry temperature (°C)	23	23	23
Nitrogen or Argon, others on request (l/h)	200-2000	200-2000	200-2000
Controller	on request	on request	on request

HTK

TECHNICAL DATA / TUNGSTEN & HTK 120

Parameter	HTK 8 W/22-1G	HTK 25 W/22-1G	HTK 120 MO/16-3G MIM
Insulation material	Tungsten	Tungsten	Molybdenum
Dimensions: External H x W x D (mm)	2100 x 1300 x 1100	2200 x 1900 x 1800	-
Transport weight (kg)	1300	1900	-
Volume (litres)	8	25	120
H x W x D usable space without retort (mm)	200 x 200 x 200	250 x 250 x 400	-
H x W x D usable space with retort (mm)	180 x 180 x 200	230 x 230 x 400	-
Tmax vacuum (°C)	2200	2200	1600
-Delta-T between 500 and 1500°C (K) according to DIN 17052	± 5	± 5	± 5
Max. heat-up rate (K/min)	10	10	-
Cooling time (h)	6	6	<4
Power (kW)	45	100	100
Voltage (V)	400	400 (3P)	400 (3P)
Current (A)	112	3x 150	3x 150
Series fuse (A)	3x 160	3x 200	3x 200
Leakage rate - clean, cold and empty (mbar l/s)	-	-	5x10-3
Vacuum range depending on the pumping unit	rough, fine or high vacuum	rough, fine or high vacuum	rough, fine or high vacuum
Cooling water volume (l/min)	40	100	100
Max entry temperature (°C)	23	23	23
Nitrogen or Argon, others on request (l/h)	200-2000	200-2000	200-2000
Controller	on request	on request	on request

HTK

DOWNLOADS

PRODUCT DATA SHEET HTK METAL →

carbolite.com/files/450748/product-data-sheet-htk-metal.pdf

VACUUM FURNACE CATALOGUE →

carbolite.com/files/15236/vacuum-inert-and-reactive-gas-furnaces-up-to-3000-c.pdf

HTK

CONTACT US

carbolite.com/contact-services/contact-form/?prefilltext=contact_form.request&product=G-3-UCF-A

REQUEST A QUOTE

carbolite.com/contact-services/contact-form/?prefilltext=contact_form.quote_request&product=G-3-UCF-A

CARBOLITE®
a VERDER company

carbolite.com/products/vacuum-furnace/chamber-furnaces/htk-mo-htk-w/

© Carbolite Gero – carbolite.com / Content may be subject to modifications or corrections